lightway®
THE TUBULAR LIGHT PIPE

Installation Instructions
LIGHTWAY CRYSTAL HP

PITCHED ROOFS

Lightway s.r.o.
Ledvinova 1714
Praha 4 , 149 00
http://www.lightway.cz ; http://www.svetlovody.cz
email: info@lightway.cz

iRCG Intelligent Ray Catcher Glass | Low Reflection Surface | High Transmitivity Sodium-Potassium Glass

Please read these instructions carefully

Contents

Contents.....2

General.....3

Component Storage.....3

Safety at Work.....3

Recommended Installation Tools and Equipment.....3

Before You Start Installing the Light Guide.....3

Description of the System.....4

Accessories of the System.....5

Connecting Material.....5

Dimensions of Light Guides and Holes in Building Structures.....6

Installation Process.....7

Location of the Light Guide.....7

Preparation of Holes.....8

Fixing the System on the Roof.....9

Preparation of the Tubes.....10

Fixing the Tube in the Sleeve.....11

.....13

Completion of the System on the Roof.....13

Completion of the System in the Interior.....14

Insulation of the Tube.....15

This document is copyrighted by the LIGHTWAY s.r.o. company;
any further use of the document as a whole or of a part thereof without the prior consent of the company's representative is forbidden.
©LIGHTWAY s.r.o. 2007

General

Component Storage

During storage, all the components of the LIGHTWAY CRYSTAL HP system must be protected **against damage** caused by external forces.

Never remove the protective film from mirror-finished components, to prevent weakening of the effect of the finish by dust or other dirt. The film shall be removed in the final stage of installation.

The tubes **must not be exposed to sunlight**. In the case of tubes with film there is the risk that the protective film will “boil” on the mirror surface of the tube and it will be impossible to remove it in the final stage of installation. In the case of tubes without the protective film there is the risk of spontaneous combustion of the roof due to the high reflectivity of the material.

Safety at Work

Use only installation equipment in **good repair.**
Use **protective equipment** (safety goggles, mask etc.).
During installation and handling of parts of the system it is necessary to use safety **cotton gloves.**
During work **at heights** follow the occupational safety standards (binding, ladders, scaffolding etc.)
If you use materials and tools from other manufacturers (e.g. sealing putty) **follow the manufacturer’s instructions.**
During the installation make sure that the **roof surface is not dangerous** for installation (wet, slippery etc.).

Recommended Installation Tools and Equipment

Metal shears, sharp knife, flat screwdriver, Philips screwdriver, cordless drill with attachment for Philips screwdriver and bits, straight handsaw, protective goggles (with clear and dark lenses), working gloves.
Make sure that all tools and equipment to be used are in good repair.

Before You Start Installing the Light Guide

Please dedicate enough time to careful **preparation and planning** of the installation.
Think over the expected **location of the light guide**. Measure and/or calculate the lengths of the tubes needed and buy the necessary elbows.
Check whether you have all components available that are needed for the installation of the system.

This document is copyrighted by the LIGHTWAY s.r.o. company;
any further use of the document as a whole or of a part thereof without the prior consent of the company’s representative is forbidden.
©LIGHTWAY s.r.o. 2007

Description of the System

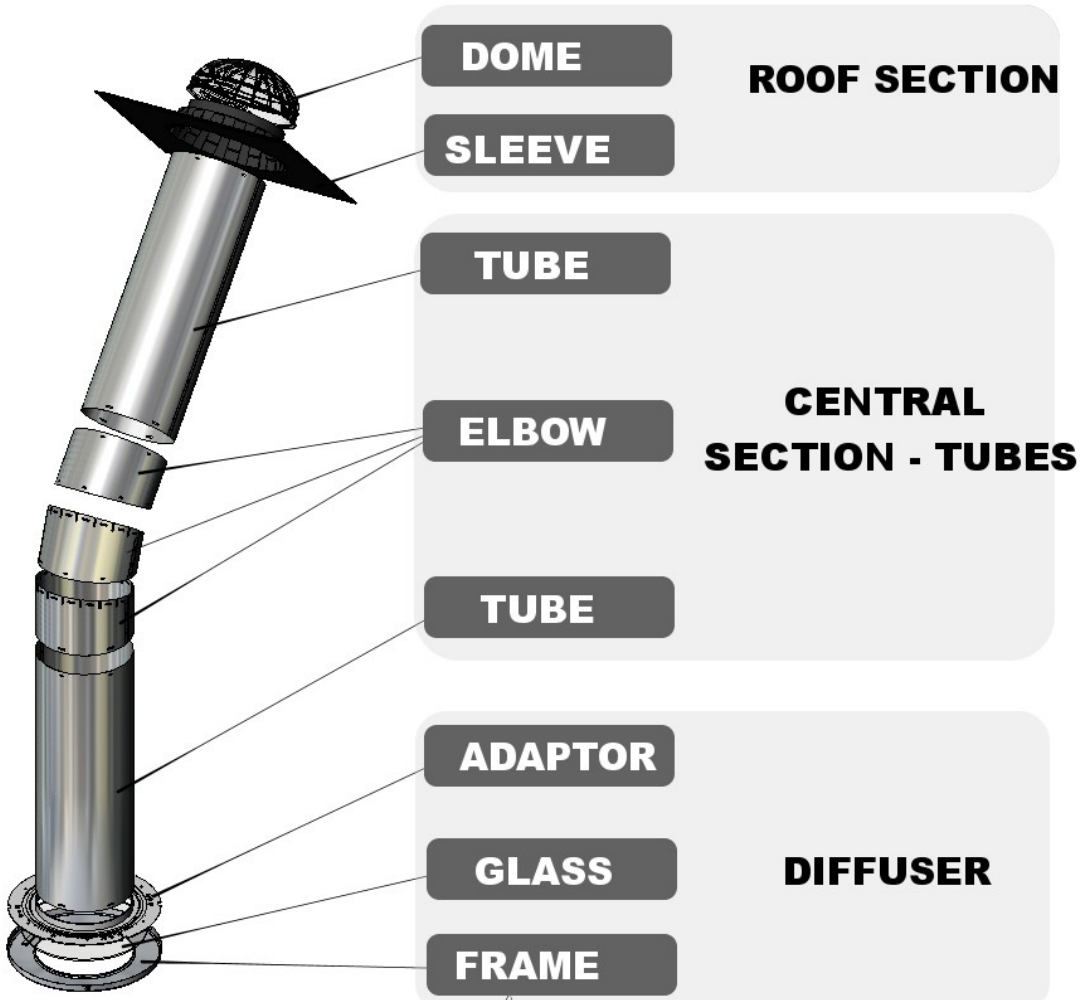

Figure 1

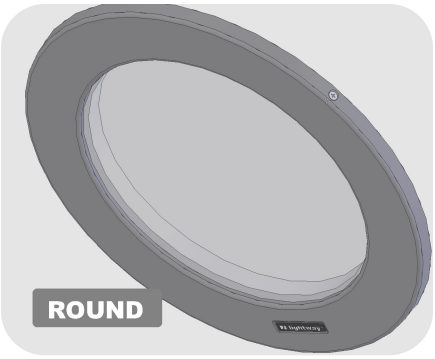

Figure 2 - Diffuser Types

This document is copyrighted by the LIGHTWAY s.r.o. company;
any further use of the document as a whole or of a part thereof without the prior consent of the company's representative is forbidden.
©LIGHTWAY s.r.o. 2007

Accessories of the System

Brush gasket
Bitumen band
Folded belt
Wedge gasket

Connecting Material

Table 1

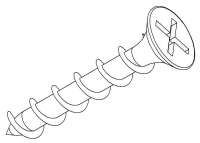 SCREW 1 FOR PLASTERBOARD	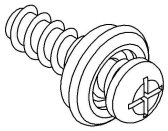 SCREW 2 AND WASHER FOR FIXING THE DOME (SCREW LENGTH 30mm)	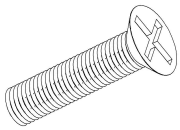 BOLT 1 FOR FIXING FRAMES
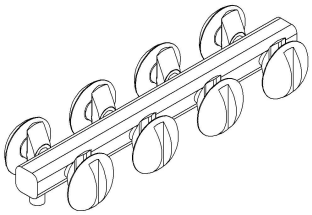 CONNECTION ELEMENTS OF THE LIGHTWAY CRYSTAL SYSTEM	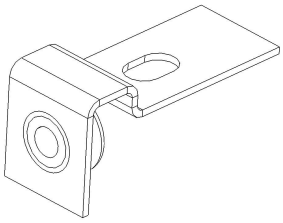 GLASS AND ROUND DIFFUSER HOLDER	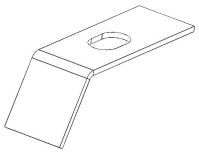 HOLDER OF GLASS FOR SQUARE DIFFUSER
BOLT 3. ATTACHING THE TUBE TO THE PULL-OVER SECTION	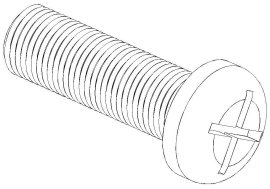 BOLT 2 FOR FIXING GLASS HOLDERS	

This document is copyrighted by the LIGHTWAY s.r.o. company;
any further use of the document as a whole or of a part thereof without the prior consent of the company's representative is forbidden.
©LIGHTWAY s.r.o. 2007

Dimensions of Light Guides and Holes in Building Structures

Table 2

Dimension Series	Diameter of the Tube	Recommended Diameter of the Hole
LIGHTWAY CRYSTAL 200HP	152 mm	160 mm
LIGHTWAY CRYSTAL 300HP	220 mm	230 mm
LIGHTWAY CRYSTAL 400HP	320 mm	330 mm

This document is copyrighted by the LIGHTWAY s.r.o. company;
any further use of the document as a whole or of a part thereof without the prior consent of the company's representative is forbidden.
©LIGHTWAY s.r.o. 2007

Installation Process

Installation shall be performed in several steps:

1. measuring the location of the light guide
2. preparation of holes
3. fixing the system to the roof
4. installation and preparation of tubes
5. fixing the tube in the sleeve or in the pull-over section
6. completion of the assembly on the roof
7. completion of the system in the interior
8. insulation of the tube

Location of the Light Guide

Try to locate the light guide so that it does not interfere with the **bearing structure of the roof**. Usually it can be located between the rafters.

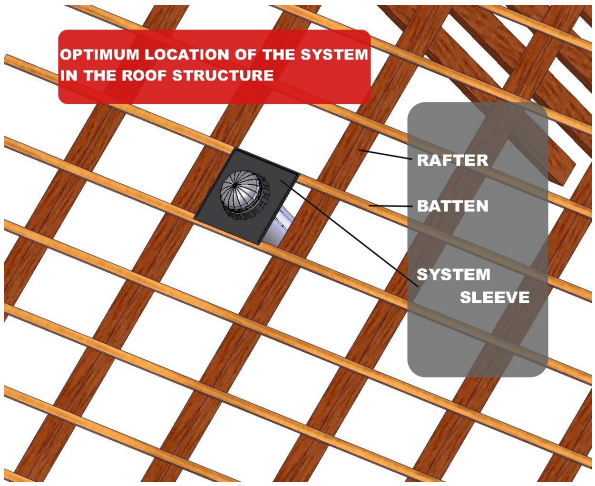

Figure 3

The outlet of the light guide on the pitched roof must also be planned with respect to the location of the **battens.** Try to locate the light guide so that the existing battens do not need to be cut. However, if the span of the battens is not optimal, use auxiliary battens.

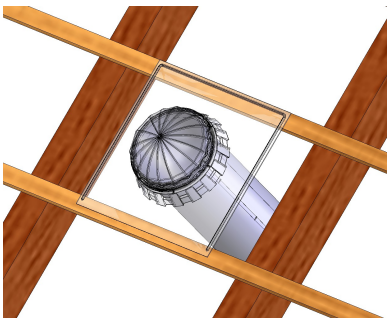

Figure 4 - Optimum Case

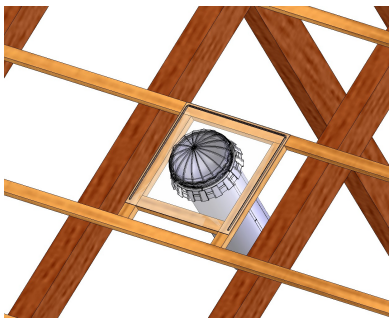

Figure 5 - Use of Auxiliary Battens

This document is copyrighted by the LIGHTWAY s.r.o. company;
any further use of the document as a whole or of a part thereof without the prior consent of the company's representative is forbidden.
©LIGHTWAY s.r.o. 2007

In addition, during locating the light guide watch the **electric cabling,** which must not be disturbed.

When planning the location of the light guide (diffuser) in the room, take into account its added **load to the ceiling**. Make sure how and under what conditions it is possible to place the diffuser on your ceiling.

When placing the light guide in the existing structures, we always recommend having it assessed by an expert!

Preparation of Holes

When you have the light guide measured preliminarily and you know where it will be placed, start making holes for the tubes. For the dimensions of individual holes see Table 2.
Make the holes successively according to the materials used, the hole in the roof shall be made according to the roofing used and the method of casing. The process for battens is described above, in the case of a cased roof cut out a hole in the boards of a diameter according to Table 2.

This document is copyrighted by the LIGHTWAY s.r.o. company;
any further use of the document as a whole or of a part thereof without the prior consent of the company's representative is forbidden.
©LIGHTWAY s.r.o. 2007

Fixing the System on the Roof

Fix the sleeve and the sleeve gasket on the roof and adapt the roofing.

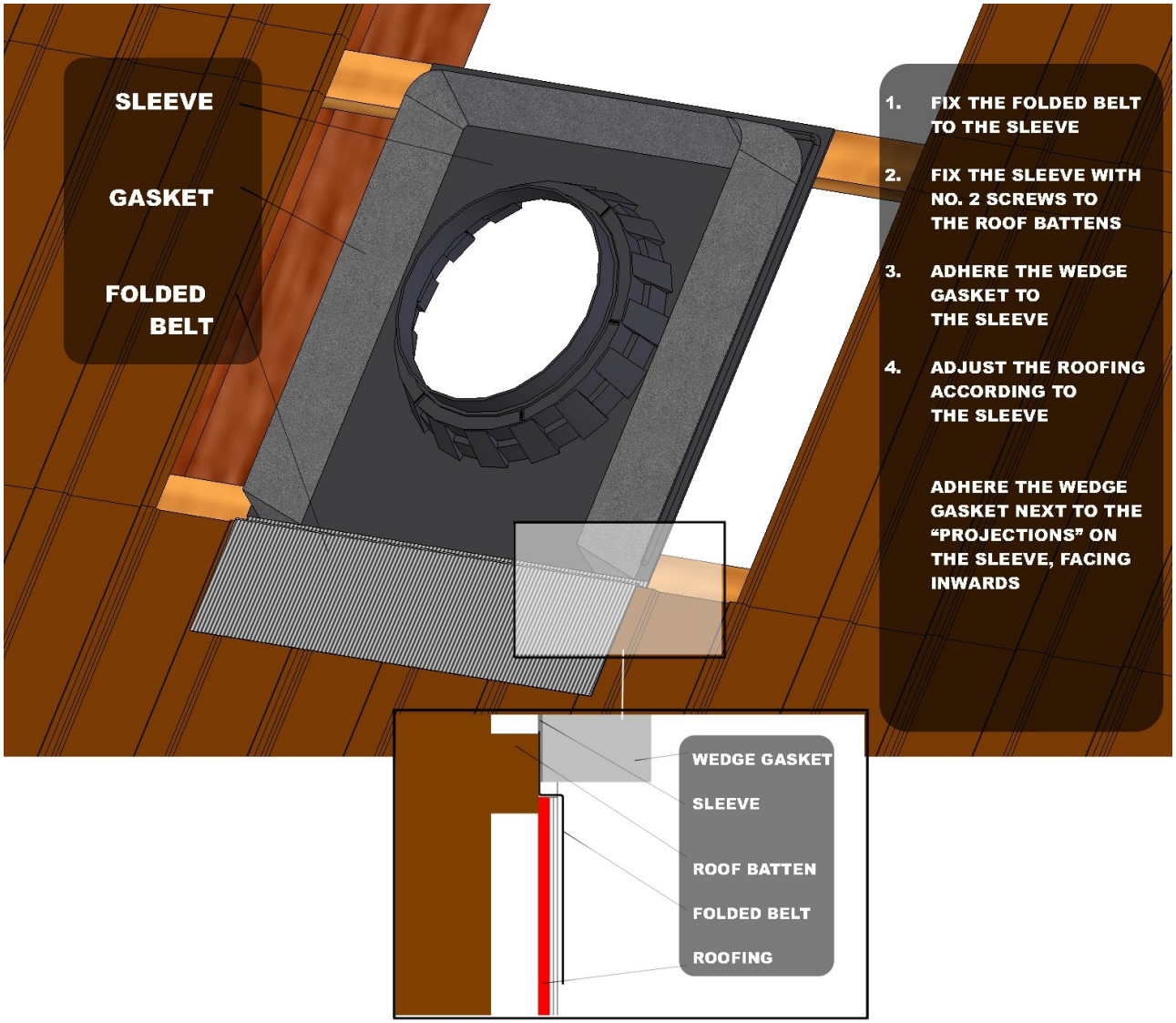

Figure 6

This document is copyrighted by the LIGHTWAY s.r.o. company;
any further use of the document as a whole or of a part thereof without the prior consent of the company's representative is forbidden.
©LIGHTWAY s.r.o. 2007

Preparation of the Tubes

First perform a **"test"** connection and location of the **tubes.** Remove the protective film from the tubes and connect them using the plastic joints. It is necessary to observe the orientation of the tubes, the upper part is marked with a small hole. If it is necessary to use elbows (because of obstacles such as air-conditioning etc.), proceed as follows: adjust the elbow approximately at the required angle (to set the angle, turn parts of the elbow variously towards each other, the extreme position of the setting is shown in Fig. 8.), connect it to the tube and try to place the light guide in the prepared holes. Assemble the elbow in the order according to Fig. 7, in which you can see the elbow both in the disassembled and assembled states. On the central and lower part finely shape the part according to the expected angle. If the angle agrees, mark the necessary shortening of the tube on the outer side, both on the roof and in the diffuser. Always shorten only the end tubes. If it is necessary to shorten the tube in the central section, place two tubes one inside another. If, in this case the overlap of the two tubes is longer than 5 cm, it is not necessary to secure the tubes in any way, only to seal the joint with the bitumen band.

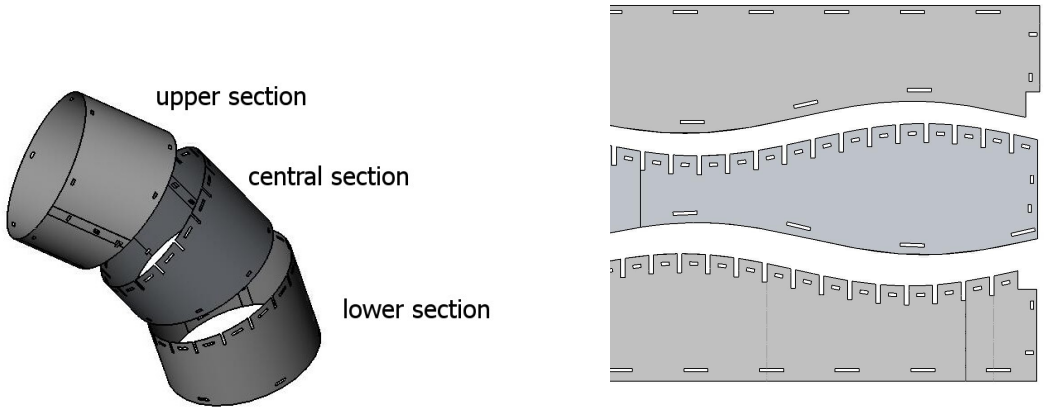

Figure 7 - Elbow

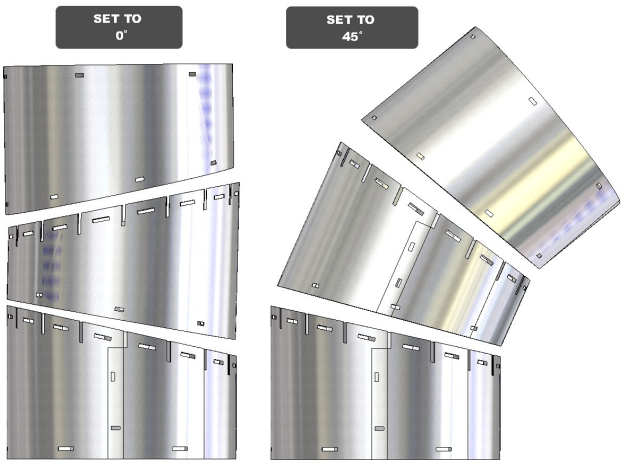

Figure 8 – Adjustment of Elbows

This document is copyrighted by the LIGHTWAY s.r.o. company;
any further use of the document as a whole or of a part thereof without the prior consent of the company's representative is forbidden.
©LIGHTWAY s.r.o. 2007

Shorten the tubes to the required size,, connect them with joints and secure with the bitumen band. Now the tubes are not detachable.

Figure 9

Connection of the tubes may only be performed by means of the supplied plastic joints, which shall be pulled on and turned 90° in the prepared holes - see Fig. 10.

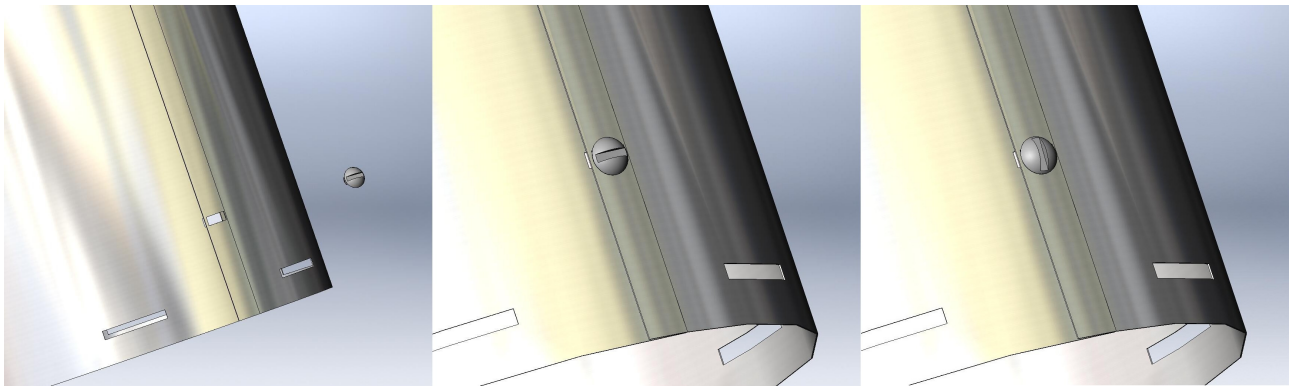

Figure 10 – Connection of Tubes

Fixing the Tube in the Sleeve

Run the tube through the sleeve, adhere the upper brush gasket to it (approx. 1 mm under the edge of the tube) and in the inner part adhere the fixing “strip” of the tube. Fix the tube to the sleeve with the No. 3 screws - see Fig. 12. Follow this procedure, otherwise the tube may become deformed! Make sure that the bolts are located approximately in the centre between the markings on the sleeve - see Fig. 11. In the points of these markings the dome will be screwed on. After fixing the tube in the pull-over part affix the bottom brush gasket according to Figure 14, put on the dome and direct it in the direction so that the holes for fixing the dome are directly over the marking on the pull-over section - see Fig. 13. Bore the pull-over part carefully with a bit 3 mm in diameter. (High speed, low pressure on the drill). Insert a No. 2 screw with a washer in the bored holes.

This document is copyrighted by the LIGHTWAY s.r.o. company;
any further use of the document as a whole or of a part thereof without the prior consent of the company’s representative is forbidden.
©LIGHTWAY s.r.o. 2007

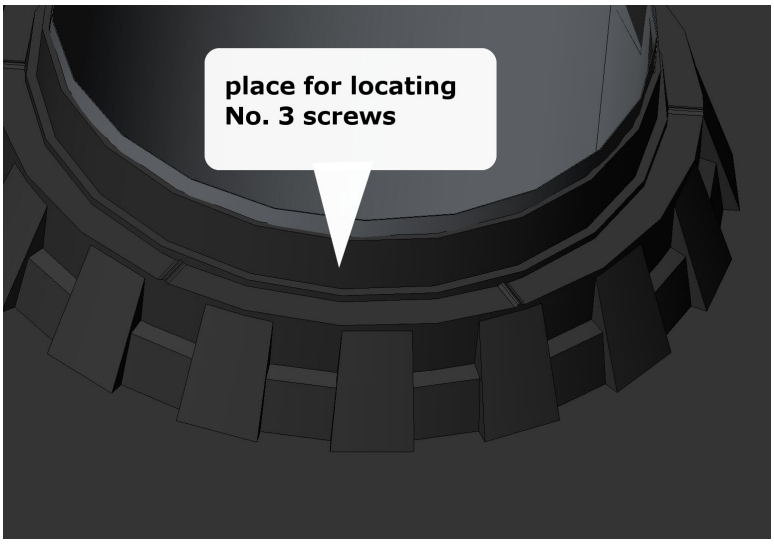

Figure 11

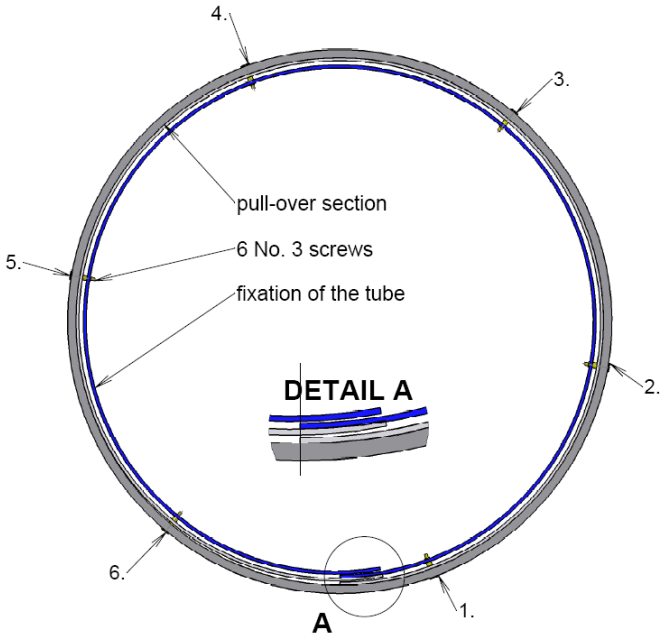

Figure 12

This document is copyrighted by the LIGHTWAY s.r.o. company;
any further use of the document as a whole or of a part thereof without the prior consent of the company's representative is forbidden.
©LIGHTWAY s.r.o. 2007

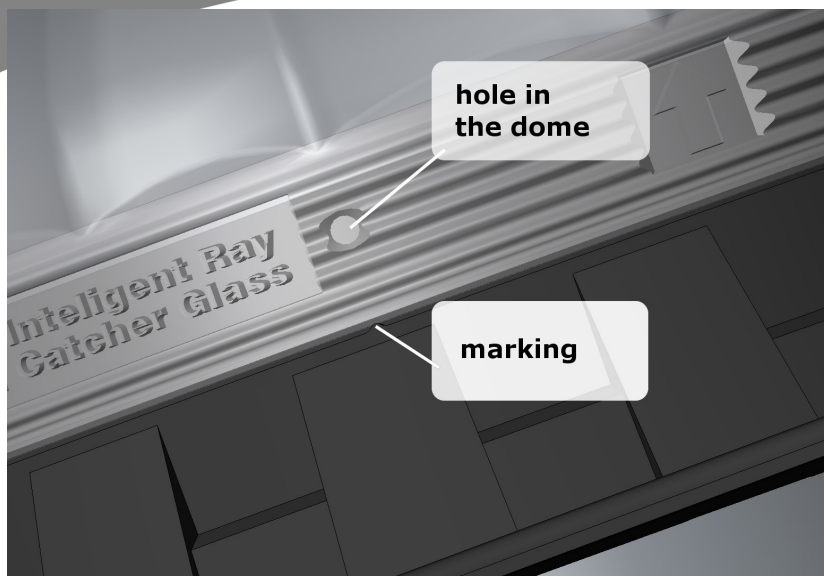

Figure 13

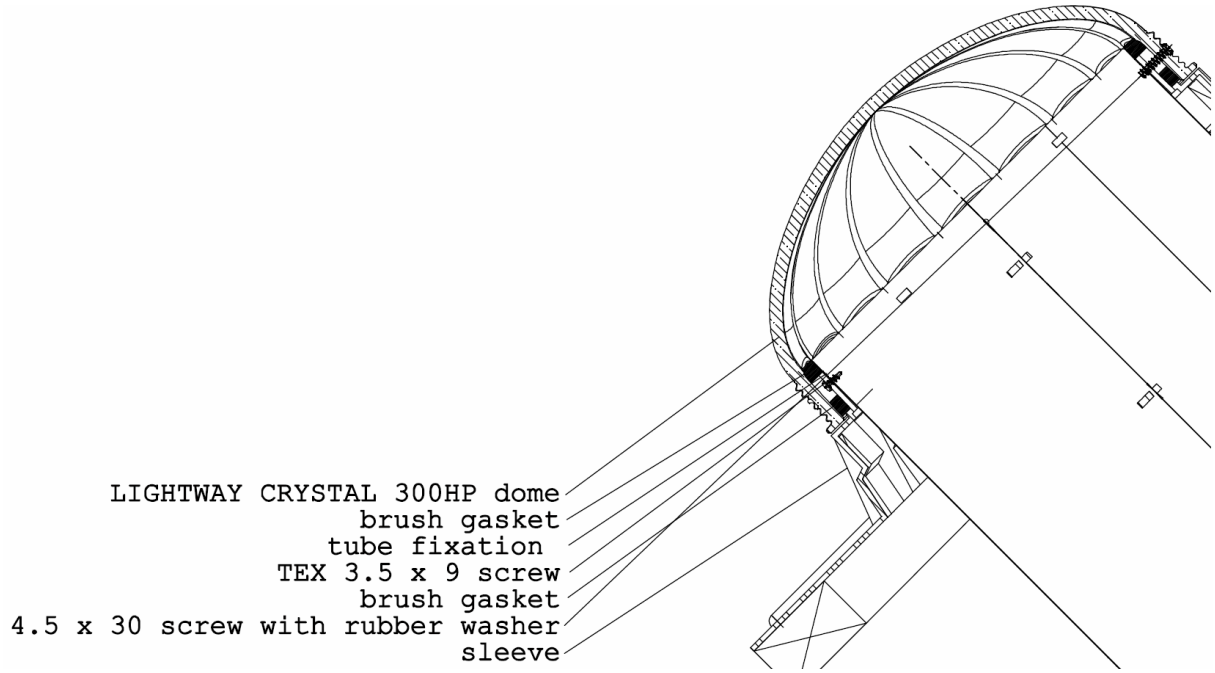

Figure 14

Completion of the System on the Roof

Cover the edges of the sleeve with the roofing and shape the edging foil.

This document is copyrighted by the LIGHTWAY s.r.o. company;
any further use of the document as a whole or of a part thereof without the prior consent of the company's representative is forbidden.
©LIGHTWAY s.r.o. 2007

Completion of the System in the Interior

Pull the **adaptor** on the tube and fix it to the ceiling with the No. 1 screws (see connecting material) through the prepared holes. At this time, watch the orientation of the adaptor.
In the case of a plasterboard or coffered ceiling use a plastic **counterpart**, so that the weight is distributed over the entire area of the material. In the case of a coffered ceiling use a **wooden counterpart**. If a counterpart cannot be used, apply another solution recommended by the manufacturers of plasterboard (e.g. special dowels to plasterboard). **It is forbidden to mount the adaptor to plasterboard with screws only!**

In the case of wooden ceilings screw directly in the ceiling.

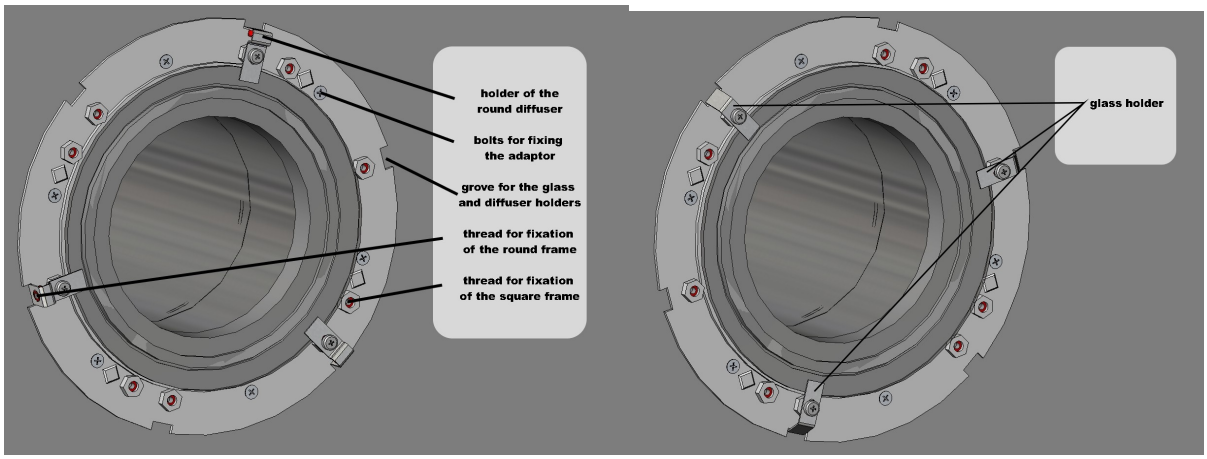

Figure 15

Fix the **glass** with the glass holders**.** Only the threaded holes with cutouts next to them are intended for the glass holders. The remaining 4 holes are for direct attachment of the square diffuser frame.

Mount the **frame** with bolts onto the prepared threaded holes.

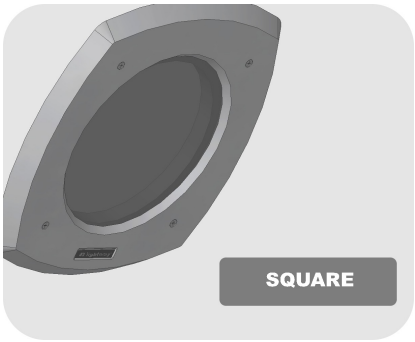

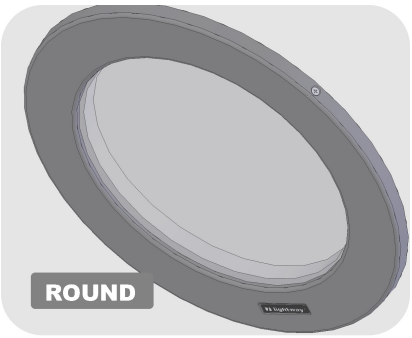

Figure 16

This document is copyrighted by the LIGHTWAY s.r.o. company;
any further use of the document as a whole or of a part thereof without the prior consent of the company's representative is forbidden.
©LIGHTWAY s.r.o. 2007

Insulation of the Tube

Wrap the tube in thermal insulation and adhere the insulation according to regular procedures.

This document is copyrighted by the LIGHTWAY s.r.o. company;
any further use of the document as a whole or of a part thereof without the prior consent of the company's representative is forbidden.
©LIGHTWAY s.r.o. 2007